Connector

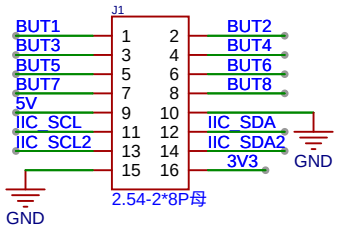

Button and Led

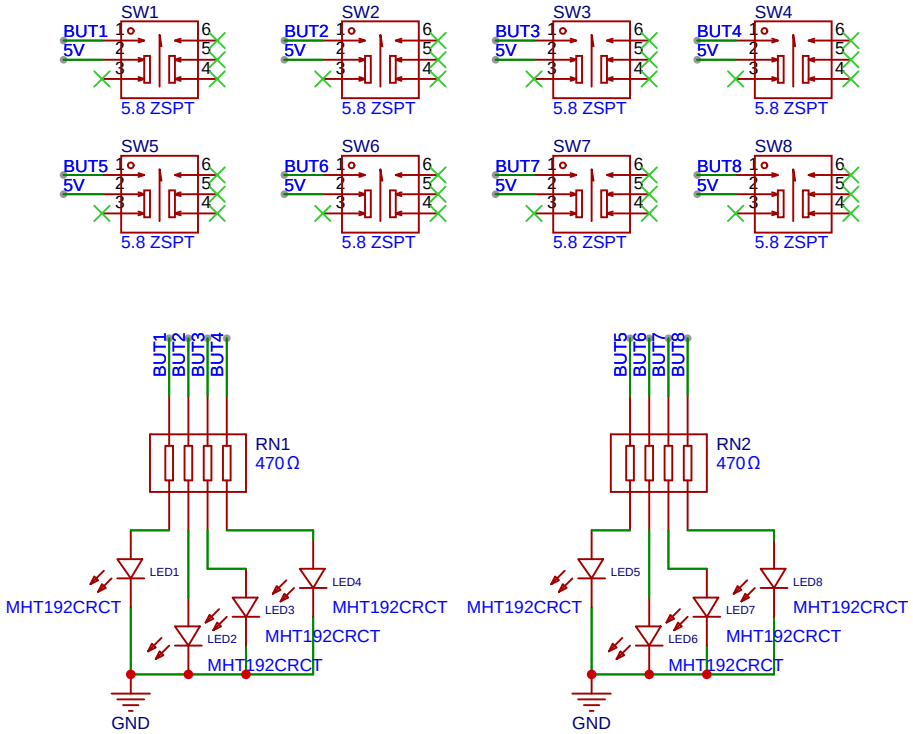

DOMIX - Domotic module for smart home & co			Create at	2026-02-06	Drawn	carletz
			Update at	2026-03-19	Reviewed	carletz
Version	Size	Page 1 Total 1	Schematic	M9 - Upper Module		
1	A4	EasyEDA	Board	U9 - SPRINKLER - UPPER	Page	Board